10 Gbps Tunable VCSEL-based SFP+ with Integrated G.METRO Functionality for Fronthaul Access Networks

Hung Kai Chen, Christopher Chase*, and Michael Huang
[1]Bandwidth10 LTD, 1218 Seventh St., Suite A, Berkeley, CA, USA
*Email: cchase@bandwidth10.com

Introduction

Motivation

- **Low cost**, **10 Gbps**, **tunable**, **1550 nm transceiver** for DWDM PON front haul access networks driven by C-RAN architectures
- Tunablility needed for lower in the field installation and maintenance costs
- Conventional wavelength lockers are too costly for the access market.

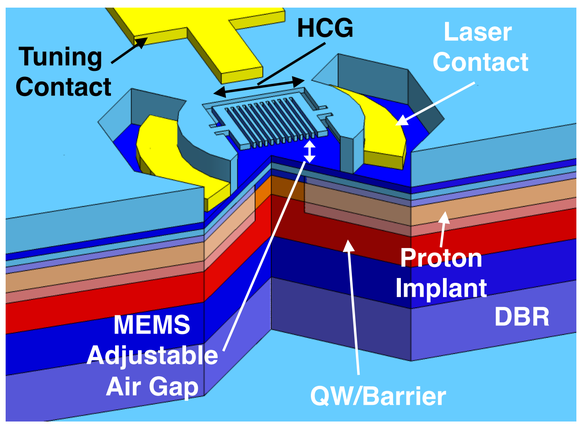

Innovations

- **High contrast grating (HCG)** as a MEMS-actuatable mirror for a low cost **directly-modulated** tunable VCSEL-based transceiver
- Using the AWG and other components already present in the system, the laser wavelength can be locked without any integrated locker using draft ITU-T G.METRO approach.
- Low speed optical signaling integrated in the transceiver can change channel, wavelength lock laser, and provide other system level functions without any additional hardware.

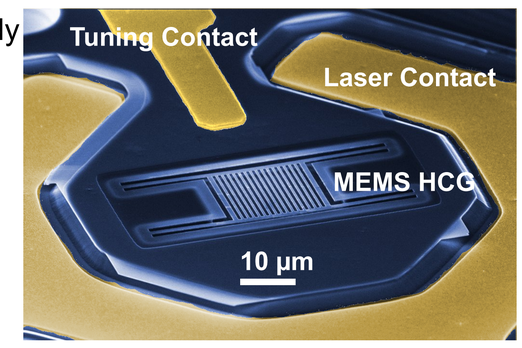

VCSEL-Based SFP+

- Designed for cost-sensitive, DWDM market applications
- **SFP+ form factor** with tunable VCSEL TOSA and APD receiver at up to 10 Gbps over 10+ km of fiber with no compensation.
- **16+ channels** on a 100 GHz DWDM grid in the C or L band

- **<1.5 W** power consumption
- Operates over commercial temperature range
- Industrial temperature range up to 3 Gbps
- Industrial temperature at 10 Gbps in development
- 50+ dB SMSR for all channels
- Power ~+1~-1 dBm across the tuning range

Optical Spectrum of all channels

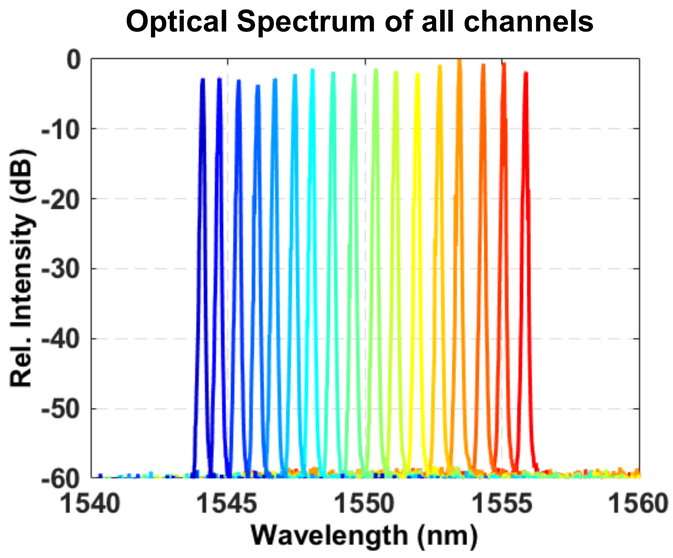

Power and extinction ratio for each channel

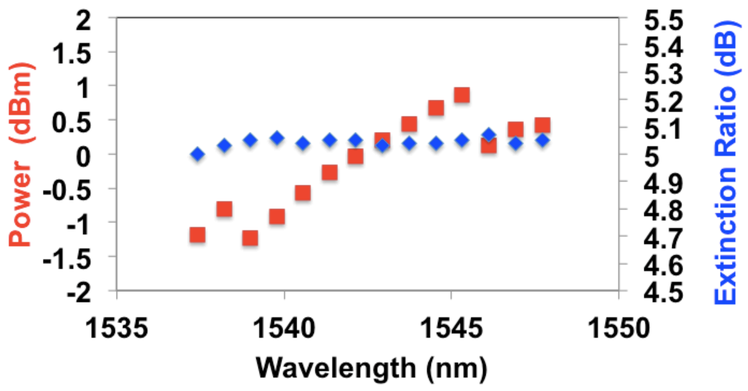

- Consistent ER achieved across the tuning range of 5±0.1 dB
- Bit error rate of 4 channels across the tuning range was measured at 10.3 Gbps with PRBS 2^{31}-1, back-to-back and after 10 km of SMF-28
- Power penalty is ~ 2.7dB for 10 km of fiber at 10 Gbps for all channels.
- Received power at 10 Gbps at a BER of 10^{-3} Back-to-back was -29.2 dBm
- Longer links can be realized using DCM
- Allows for 22+ dB link budgets at 10 Gbps

Bit error rate after fiber transmission for 4 channels

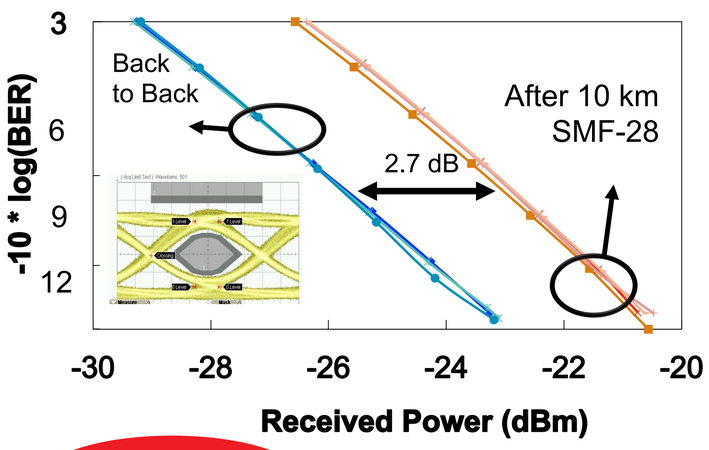

- This transceiver is a promising option for DWDM front haul access networks where low cost wavelength-locker-free transceivers are needed.

BANDWIDTH10, LTD.

Transceiver Design with Integrated Low Speed Overlay

- Transceiver follows draft ITU-T G.METRO specifications
- Control signal is sent from the head end side of the link to the tail end of the link, controlling tail end receiver.
- Control signal is a low duty cycle (~7-9%) signal at ~50 kbps, not interfering with the high speed payload

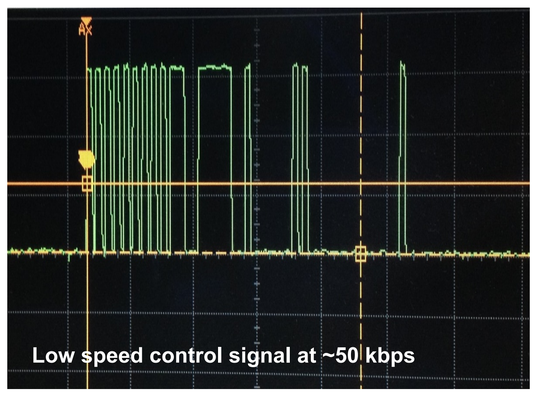

- Tail end can send a pilot tone back to the head end, which can be used to ascertain the channel of the tail end transceiver with a tap on all of the signals and external signal processing on the head end side.
- The transmitted low speed control signal is inserted by the MCU through low speed control of laser bias current, external to the high speed driver
- Received low speed signal is detected and decoded by MCU after low speed/high speed filter split.
- G.METRO commands and wavelength tuning data can be communicated through I²C interface
- Implementation of tail end sending DDMI and other control information in progress

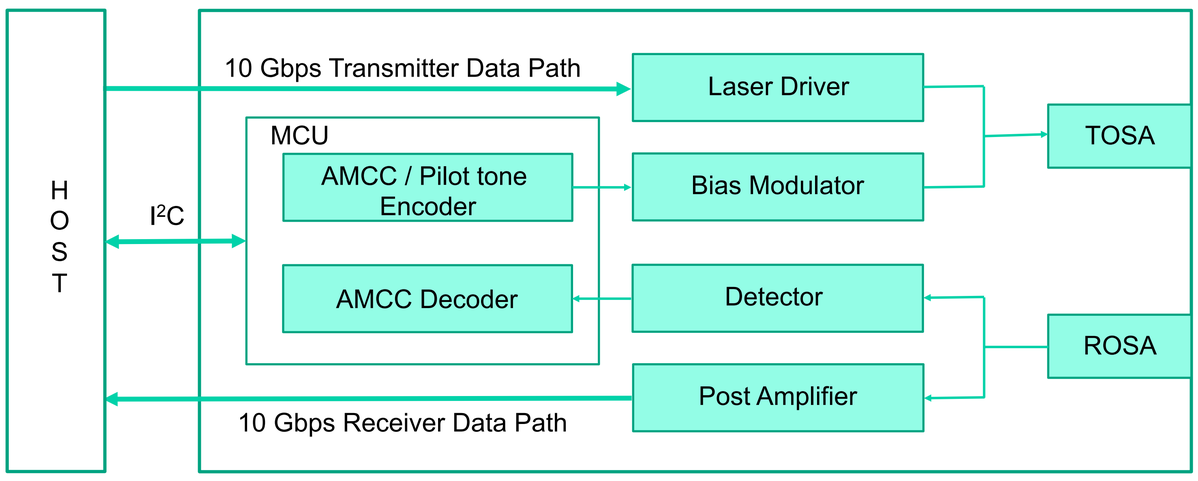

Wavelength Tuning and Stabilization by G.METRO

- We use a system level feedback loop and components already in the networks such as the AWG to achieve wavelength stabilization in a DWDM system
- This results in significantly lower overall system costs compared to having a wavelength locker in every transceiver.
- Our SFP+ can act as the tail end unit in the system. HEE is under development
- The TEE SFP+ can be remote controlled by the head-end equipment to change channels, fine tune the wavelength, and reset.
- The same commands are also supported over I2C so the host can alternatively be used instead of low speed overlay, depending on the system-level approach

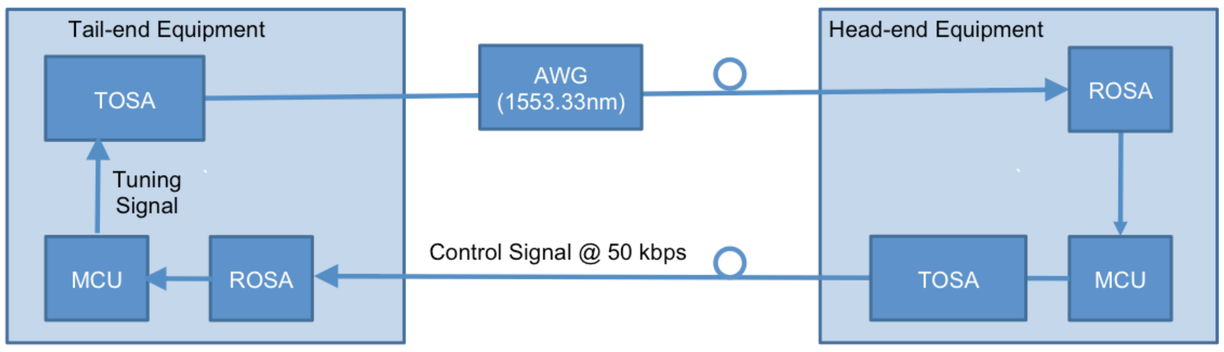

Note: High-speed Data Path is omitted

System Schematic

- The system scans the transceiver wavelength until the power drop at the AWG's band edges is seen, determining the edges of the AWG filter.
- Afterwards, the wavelength is centered in the middle of the two band edges.
- Channel can be repeatedly locked within ±15 pm using this technique.

Finding AWG center and locking wavelength

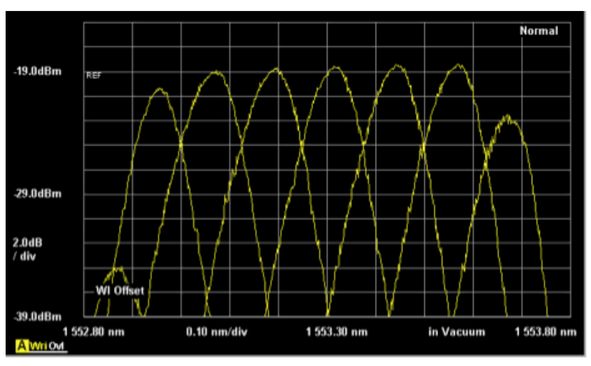

Step 1: Coarse search

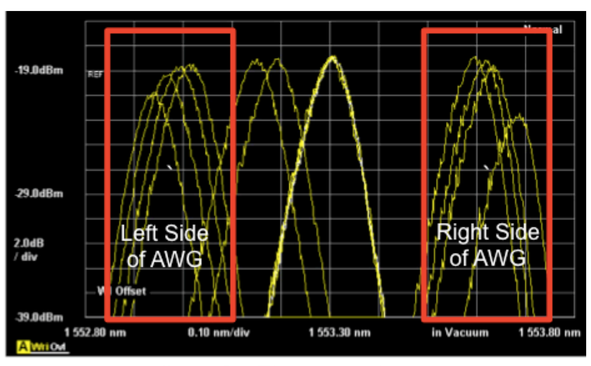

Step 2: Fine search